REVISION HISTORY			
REV	DESCRIPTION	DATE	APPROVED

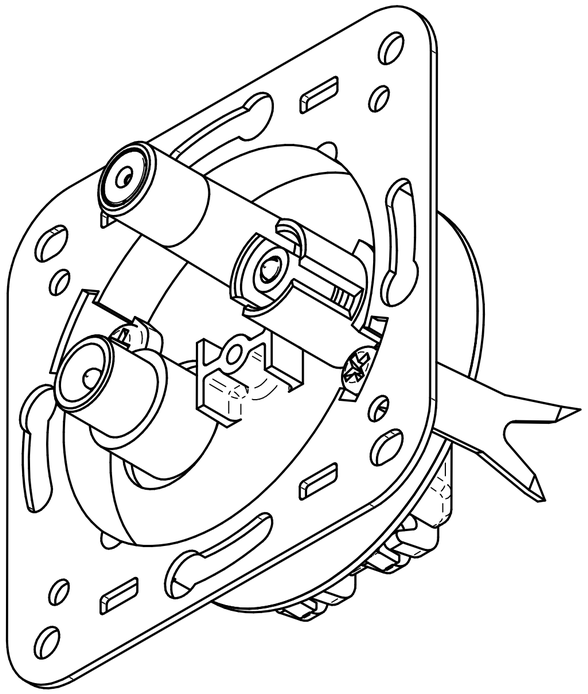

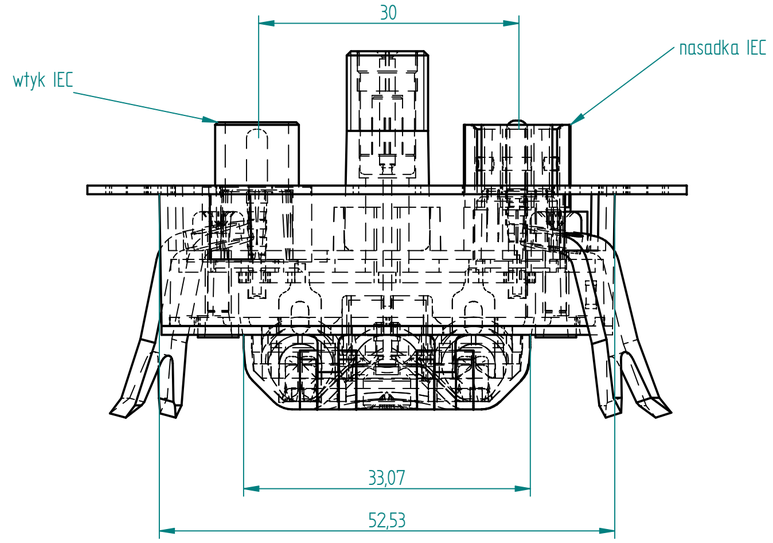

mozliwe rozne wymiary odleglosci nasadki F
od osi poziomej pezylaczy wyj. IEC:
6,9 mm, 16 mm, 20 mm

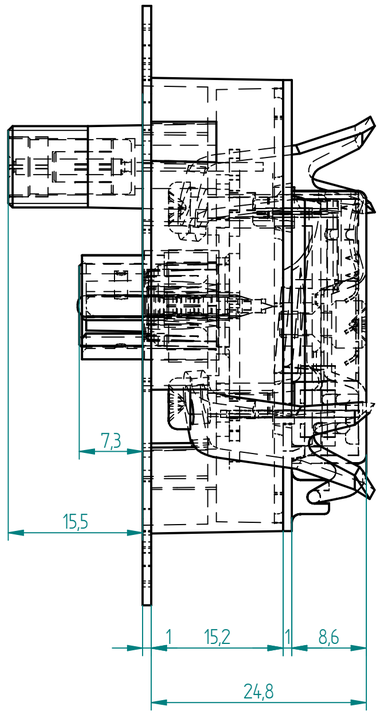

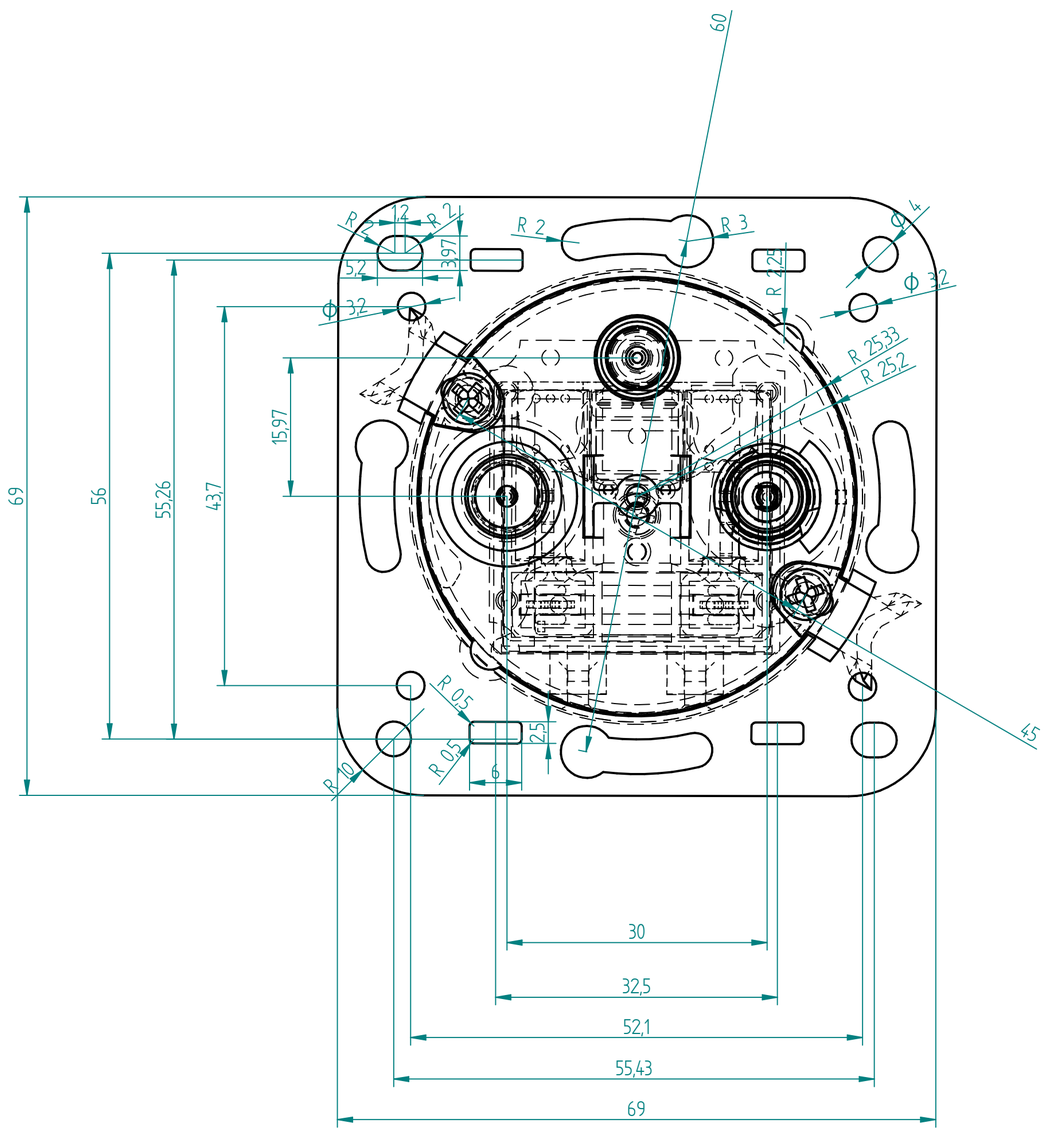

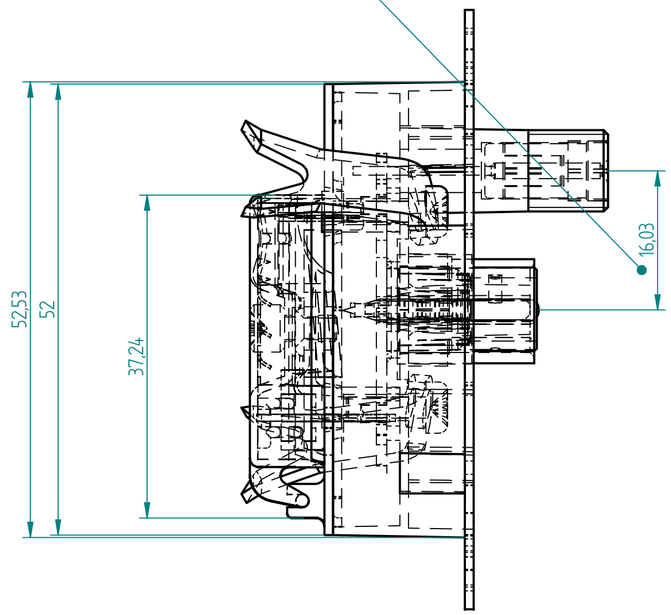

	NAME	DATE
DRAWN	Mechaniczny	11/14/14
CHECKED		
ENG APPR		
MGR APPR		

UNLESS OTHERWISE SPECIFIED
DIMENSIONS ARE IN MILLIMETERS
ANGLES ±X.X°
2 PL ±X.XX 3 PL ±X.XXX

Solid Edge

TITLE

SIZE A2 | DWG NO | REV

FILE NAME: 0c8-1f16.dft

SCALE: | WEIGHT: | SHEET 1 OF 1